BID2-G180-Y0/S220
Inductive Sensor – For High Pressures

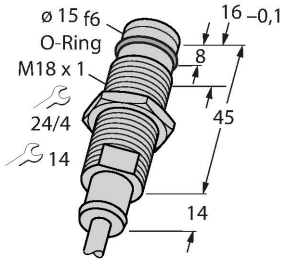

Features

- Threaded barrel, M18 x 1
- Stainless steel, 1.4305
- admissible static pressure 100 bar
- DC 2-wire, nom. 8.2 VDC
- Output acc. to DIN EN 60947-5-6 (NAMUR)
- Cable connection

Wiring diagram

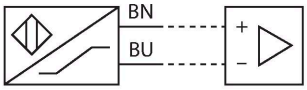

Functional principle

Inductive sensors detect metal objects contactless and wear-free. For this purpose they use a high-frequency electromagnetic AC field that interacts with the target. The sensors hosting a ferrite core coil generate the AC field through an LC resonant circuit.
Pressure-resistant inductive sensors withstand high pressures which makes them perfectly suited for position control in hydraulic cylinders.

Technical data

Type	BID2-G180-Y0/S220
ID	10880
Special version	S220 corresponds to: encapsulated oscillator head
General data	
Rated switching distance	2 mm
Mounting conditions	Flush
Secured operating distance	≤ (0.81 × Sn) mm
Correction factors	St37 = 1; Al = 0.3; stainless steel = 0.7; Ms = 0.4
Repeat accuracy	≤ 2 % of full scale
Static pressure	≤ 100 bar
Dynamic pressure	≤ 60 bar
Permissible contact medium	electrically conductive
Temperature drift	≤ ±10 %
Hysteresis	1…10 %
Electrical data	
Output function	2-wire, NAMUR
Switching frequency	2 kHz
Voltage	Nom. 8.2 VDC
Non-actuated current consumption	≥ 2.1 mA
Actuated current consumption	≤ 1.2 mA
Mechanical data	
Design	Threaded barrel, M18 x 1
Dimensions	58 mm
Housing material	Metal, 1.4305 (AISI 303)
Active area material	Plastic, PA12-GF30
Max. tightening torque of housing nut	25 Nm

BID2-G180-Y0/S220| 07-11-2023 19-55 | Technical modifications reserved

Technical data

Electrical connection	Cable
Cable quality	Ø 5.2 mm, Blue, LifYY, PVC, 2 m
Core cross-section	2 x 0.34 mm^2
Environmental conditions	
Ambient temperature	-25…+70 °C
Vibration resistance	55 Hz (1 mm)
Shock resistance	30 g (11 ms)
Protection class	IP67

Mounting instructions

Mounting instructions/Description

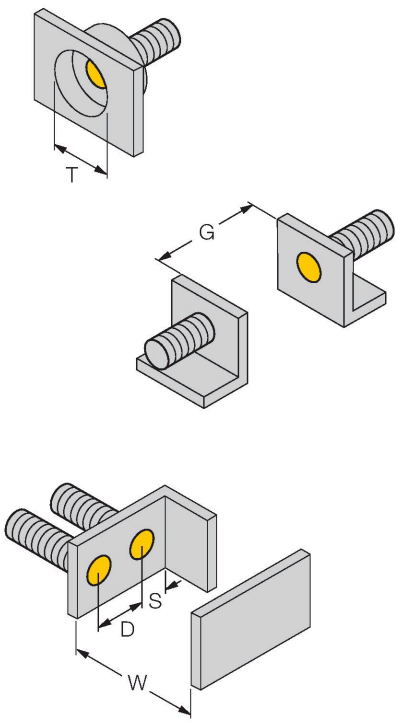

Distance D	2 x B
Distance W	3 x Sn
Distance T	3 x B
Distance S	1.5 x B
Distance G	6 x Sn
Diameter active area B	Ø 18 mm

Accessories

QM-18	6945102

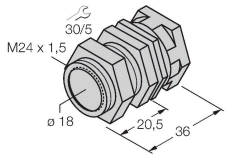

Quick-mount bracket with dead-stop; material: Chrome-plated brass. Male thread M24 × 1.5. Note: The switching distance of the proximity switches may change when using quick-mount brackets.

BID2-G180-Y0/S220| 07-11-2023 19-55 | Technical modifications reserved

Accessories

Dimension drawing	Type	ID	
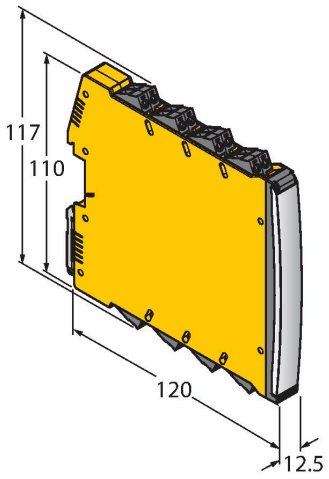	IMX12-DI01-2S-2T-0/24VDC	7580020	Isolating switching amplifier, 2-channel; SIL2 acc. to IEC 61508; Ex-proof version; 2 transistor outputs; input Namur signal; ON/OFF switchable monitoring of wire-break and short-circuit; toggle between NO/NC mode; signal doubling; removable screw terminals; 12.5 mm wide; 24 VDC power supply

BID2-G180-Y0/S220| 07-11-2023 19-55 | Technical modifications reserved