Y-splitter, M8, male, straight, 4 poles, M8, female, straight, 3 poles, M8, female, straight, 3 poles, with LED

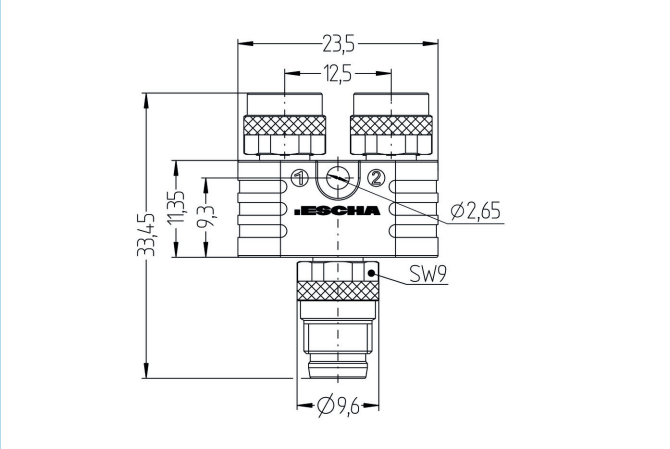

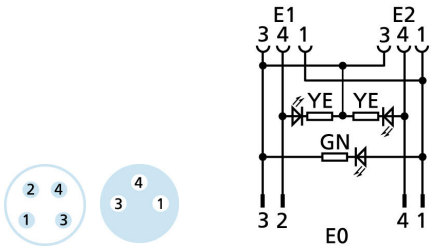

Product data	
Item description	MB-SSP4-2SKP3P3
Item-No.	8024659
Customs tariff-No.	85366990
EAN	4047106032340

Technical data	Exit 0	Exit 1	Exit 2
Connector	male, M8, with LED	female, M8, with LED	female, M8, with LED
Contact material	Metal, CuZn, gold-plated	Metal, CuZn, gold-plated	Metal, CuZn, gold-plated
Contact-carrier material	Plastic, TPU, BK	Plastic, TPU, GY	Plastic, TPU, BK
Coupling nut material	Metal, CuZn, nickel-plated	Metal, CuZn, nickel-plated	Metal, CuZn, nickel-plated
Rated voltage	30V	30V	30V
Number of pins	4	3	3
Current load (at 40°C)	3A	3A	3A

Insulation resistance	≥10^8Ω
Ambient temperature product	-30°C...+90°C
Operating voltage-indicator	LED GN
Signal status-indicator	LED YE/YE
Grip body material	Plastic, TPU, transparent
Sealing (female) material	FPM/FKM
Mechanical life-cycle	>100 mating cycles
Standards	IEC 61076-2-104
Degree of protection (mounted)	IP65, IP67, IP68
Degree of pollution	3/2

The information contained in this data sheet was compiled with the utmost care. The liability for the correctness, completeness and timelines is limited to gross negligence.

Classification	
eCl@ss 6.0	27279201
eCl@ss 7.0	27279201
eCl@ss 8.0	27279201
eCl@ss 9.0	27440106
ETIM 5.0	EC002062
ETIM 6.0	EC002925

Link to product

https://www.escha.net/en/products/standard/t-splitters-y-splitters/8024659