Accessories
Mounting kit for manual valves
BTS-DSU35-ZF05-M6

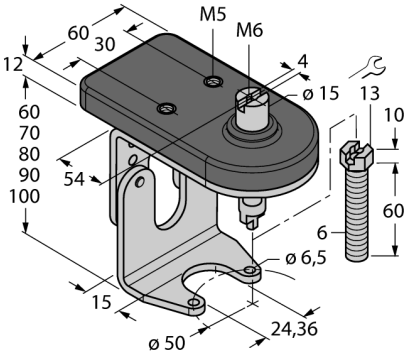

- Mounting kit with mounting plate for dual sensor and actuator (puck)
- For F05 manual valves acc. to ISO 5211 / DIN 3337
- Height-adjustable
- Adjustable shaft peg with self-locking M6 nut
- Robust stainless steel
- Vestamid mounting plate for sensors

General description

Dual sensors are especially designed for position detection in rotary actuators. They combine the reliability of non-contact inductive sensors with the flexibility of a modular housing system. A broad range of practice-oriented accessories ensure optimal adaption to your system.

Type	BTS-DSU35-ZF05-M6
ID	6901124

Design	Accessories for dual sensor, Ni4-DSU35…
Dimensions	104 x 60 x 92 mm
Housing material	Plastic, 1.4301 (AISI 304)/Vestamid

Included in delivery	1x jumper top part F05, 1x jumper bottom part F05, 2x screws DIN933-A2 M6x10, 2x serrated lock washers DIN6798-A6,4-A2, 1x drive pin M6x60, 1x self-locking nut DIN985-A2 M6

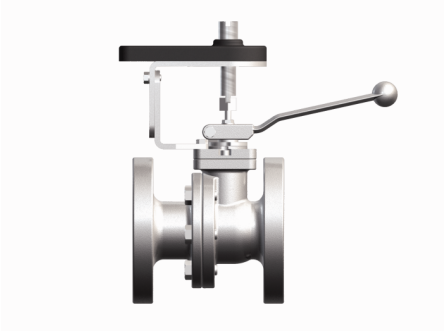

Edition • 2023-11-01T01:01:59+01:00