NI15-M30-Y1X-H1141
Inductive Sensor

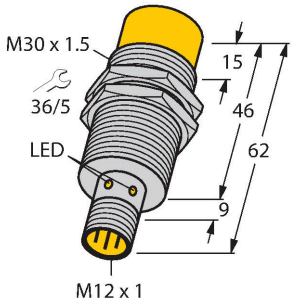

Features

- M30 × 1.5 threaded tube
- Chrome-plated brass
- DC 2-wire, nom. 8.2 VDC
- Output acc. to DIN EN 60947-5-6 (NAMUR)
- M12 x 1 male connector
- ATEX category II 1 G, Ex zone 0
- ATEX category II 1 D, Ex zone 20
- SIL2 (Low Demand Mode) acc. to IEC 61508, PL c acc. to ISO 13849-1 with HFT0
- SIL3 (All Demand Mode) acc. to IEC 61508, PL e acc. to ISO 13849-1 with redundant configuration HFT1

Wiring diagram

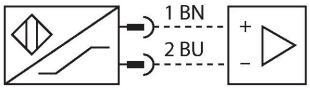

Functional principle

Inductive sensors detect metal objects contactless and wear-free. For this, they use a high-frequency electromagnetic AC field that interacts with the target. Inductive sensors generate this field via an RLC circuit with a ferrite coil.

Technical data

Type	NI15-M30-Y1X-H1141
ID	40203
General data	
Rated switching distance	15 mm
Mounting conditions	Non-flush
Secured operating distance	≤ (0.81 × Sn) mm
Correction factors	St37 = 1; Al = 0.3; stainless steel = 0.7; Ms = 0.4
Repeat accuracy	≤ 2 % of full scale
Temperature drift	≤ ±10 %
Hysteresis	1…10 %
Electrical data	
Output function	2-wire, NAMUR
Switching frequency	0.2 kHz
Voltage	Nom. 8.2 VDC
Non-actuated current consumption	≥ 2.1 mA
Actuated current consumption	≤ 1.2 mA
Approval acc. to	KEMA 02 ATEX 1090X
Internal capacitance (C_i)/inductance (L_i)	150 nF/150 µH
Device marking	Ex II 1 G Ex ia IIC T6 Ga/II 1 D Ex ia IIIC T135 °C Da
	(max. U_i = 20 V, I_i = 20 mA, P_i = 200 mW)
Mechanical data	
Design	Threaded barrel, M30 x 1.5
Dimensions	62 mm
Housing material	Metal, CuZn, Chrome-plated
Active area material	Plastic, PBT
Max. tightening torque of housing nut	75 Nm

NI15-M30-Y1X-H1141| 07-11-2023 20-29 | Technical modifications reserved

Technical data

Electrical connection	Connector, M12 × 1
Environmental conditions	
Ambient temperature	-25…+70 °C
Vibration resistance	55 Hz (1 mm)
Shock resistance	30 g (11 ms)
Protection class	IP67
MTTF	6198 years acc. to SN 29500 (Ed. 99) 40 °C
Switching state	LED, Yellow

Mounting instructions

Mounting instructions/Description

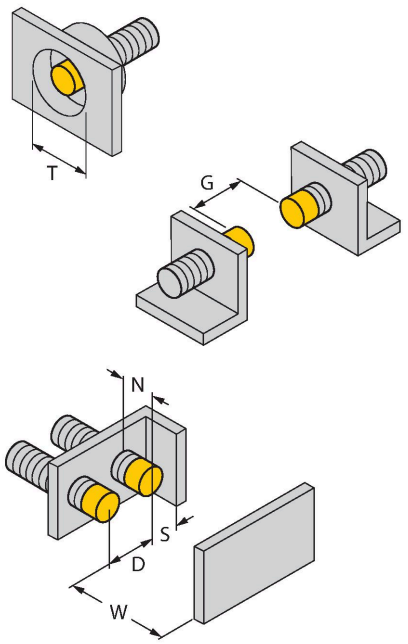

Distance D	3 x B
Distance W	3 x Sn
Distance T	3 x B
Distance S	1.5 x B
Distance G	6 x Sn
Distance N	2 x Sn
Diameter active area B	Ø 30 mm

Accessories

BST-30B	6947216

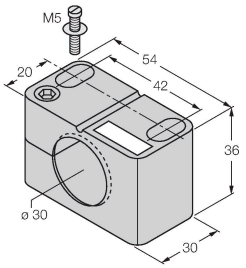

Mounting clamp for threaded barrel sensors, with dead-stop; material: PA6

QM-30	6945103

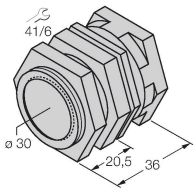

Quick-mount bracket with dead-stop; material: Chrome-plated brass. Male thread M36 × 1.5. Note: The switching distance of the proximity switches may change when using quick-mount brackets.

NI15-M30-Y1X-H1141| 07-11-2023 20-29 | Technical modifications reserved

MW-30	6945005

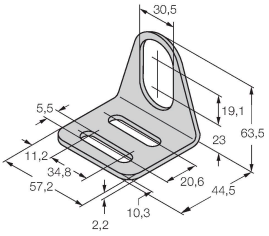

Mounting bracket for threaded barrel sensors; material: Stainless steel A2 1.4301 (AISI 304)

BSS-30	6901319

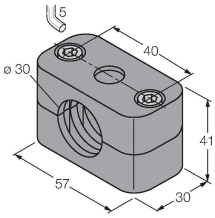

Mounting clamp for smooth and threaded barrel sensors; material: Polypropylene

Accessories

Dimension drawing	Type	ID	
	RKC4.221T-2/TEB	6628420	Connection cable, M12 female connector, straight, 2-pin, cable length: 2 m, jacket material: PVC, blue; cULus approval
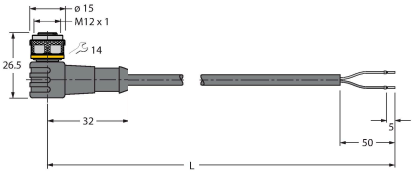	WKC4.221T-2/TEB	6628427	Connection cable, M12 female connector, angled, 2-pin, cable length: 2 m, jacket material: PVC, blue; cULus approval

Accessories

Dimension drawing	Type	ID	
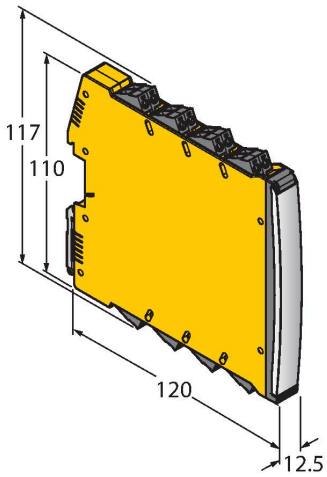	IMX12-DI01-2S-2T-0/24VDC	7580020	Isolating switching amplifier, 2-channel; SIL2 acc. to IEC 61508; Ex-proof version; 2 transistor outputs; input Namur signal; ON/OFF switchable monitoring of wire-break and short-circuit; toggle between NO/NC mode; signal doubling; removable screw terminals; 12.5 mm wide; 24 VDC power supply

NI15-M30-Y1X-H1141| 07-11-2023 20-29 | Technical modifications reserved

Instructions for use

Intended use	This device fulfills Directive 2014/34/EC and is suited for use in explosion-hazardous areas according to EN 60079-0:2018 and EN 60079-11:2012.It is also suitable for use in safety-related systems, including SIL2 (IEC 61508) and PL c (ISO 13849-1) with HFT0 and SIL3 (IEC 61508) and PL e (ISO 13849-1) with redundant configuration HFT1In order to ensure that the device is operated as intended, the national regulations and directives must be observed.
For use in explosion hazardous areas conform to classification	II 1 G and II 1 D (Group II, Category 1 G, electrical equipment for gaseous atmospheres and category 1 D, electrical equipment for dust atmospheres).
Marking (see device or technical data sheet)	Ex II 1 G and Ex ia IIC T6 Ga and Ex II 1 D Ex ia IIIC T135 °C Da acc. to EN 60079-0, -11
Local admissible ambient temperature	-25…+70 °C
Installation/Commissioning	These devices may only be installed, connected and operated by trained and qualified staff. Qualified staff must have knowledge of protection classes, directives and regulations concerning electrical equipment designed for use in explosion hazardous areas.Please verify that the classification and the marking on the device comply with the actual application conditions.
	This device is only suited for connection to approved Exi circuits according to EN 60079-0 and EN 60079-11. Please observe the maximum admissible electrical values.After connection to other circuits the sensor may no longer be used in Exi installations. When interconnected to (associated) electrical equipment, it is required to perform the "Proof of intrinsic safety" (EN60079-14).Attention! When used in safety systems, all content of the security manual must be observed.
Installation and mounting instructions	Avoid static charging of cables and plastic devices. Please only clean the device with a damp cloth. Do not install the device in a dust flow and avoid build-up of dust deposits on the device.If the devices and the cable could be subject to mechanical damage, they must be protected accordingly. They must also be shielded against strong electro-magnetic fields.The pin configuration and the electrical specifications can be taken from the device marking or the technical data sheet.
Service/Maintenance	Repairs are not possible. The approval expires if the device is repaired or modified by a person other than the manufacturer. The most important data from the approval are listed.

NI15-M30-Y1X-H1141| 07-11-2023 20-29 | Technical modifications reserved